SILENTBLOC

Key Features

- Ideal for low frequency and microvibration due to resonance point designed to be set low.
- Wide selection to choose from 2kg (4.4Lb) to 300kg (661.4 Lb)
- Pick the best fit for your application based on the load (weight)
- The published data are based on four points of support (usage)

Specifications

VI00023
VI00024

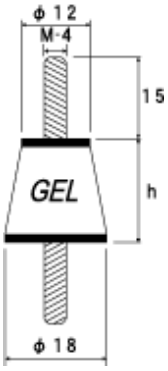

VI00025

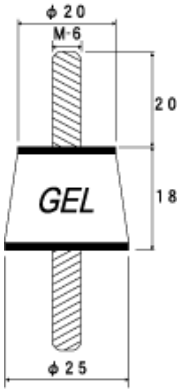

VI00026
VI00027
VI00028
VI00029

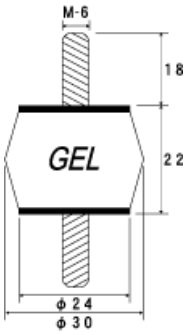

VI00030

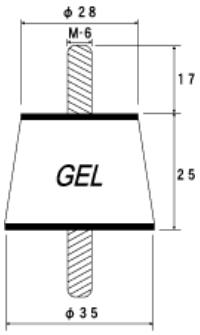

Part number	Optimum load (Kg/4 points)	Resonance Point (Hz)	Resonance Magnification (dB)	Recommended Frequency (Hz)	h (mm)
VI00023	2.0 ~3.2	16 ~15	12	23 ~	13
VI00024	1.6 ~2.4	13 ~11	13 ~12	18 ~	18
VI00025	3.2 ~8.0	14 ~12	13 ~12	20 ~	18
VI00026	8 ~14	12 ~10	12	17 ~	
VI00027	14 ~22	11 ~10	14 ~13	16 ~	
VI00028	22 ~34	11 ~10	16 ~15	16 ~	
VI00029	34 ~50	11 ~10	20 ~18	16 ~	
VI00030	50 ~100	10 ~ 8	20 ~19	14 ~	

COMPELMA – ZA des GODETS – 33 rue des Petits Ruisseaux – 91370 VERRIERES LE BUISSON – France
Tel : 33 (0)1 69 75 21 21 – Fax : 33 (0)1 60 11 40 19 – www.compelma.com – info@compelma.com

VI00031
VI00032

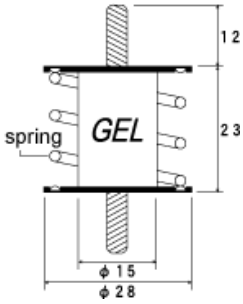

Part number	Optimum load (Kg/4 points)	Resonance Point (Hz)	Resonance Magnification (dB)	Recommended Frequency (Hz)	Bolt Diameter
VI00031	3.2 ~6.4	10 ~ 8	16 ~14	14 ~	M3
VI00032	6 ~16	10 ~ 8	18 ~16	14 ~	M6

VI00038
VI00039
VI00040

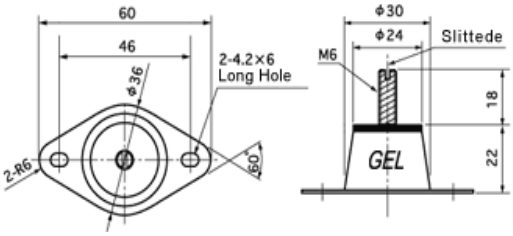

Part number	Optimum load (Kg/4 points)	Resonance Point (Hz)	Resonance Magnification (dB)	Recommended Frequency (Hz)
VI00038	5 ~ 13	15 ~10	12 ~13	22 ~
VI00039	13 ~ 30	13 ~ 9	15 ~16	19 ~
VI00040	30 ~ 50	12 ~ 9	19 ~ 21	17 ~

For applications where a plate at bottom is preferred instead of a bolt

VI00042
VI00043

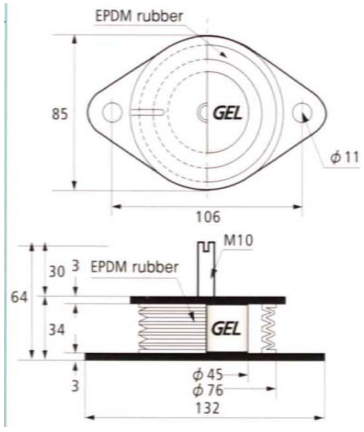

Part number	Optimum load (Kg/4 points)	Resonance Point (Hz)	Resonance Magnification (dB)	Recommended Frequency (Hz)
VI00042	100 ~ 140	8 ~9	18 ~19	13 ~
VI00043	120 ~ 300	10 ~ 15	12 ~18	15 ~

For application where a bottom plate is preferable and there is a need for damping heavy-load vibration.
Good for outdoor use in particular due to reinforced durability deriving from *αGEL* wrapped by bellows-type EPDM rubber
Stable performance in the –20℃ (-4℉) to 90℃ (194° F) range
Metal parts have a choice between 1 and 2
1: upper bolt material and bottom plate material : Iron with trivalent chromate plating
2: upper bolt material and bottom plate material : SUS304

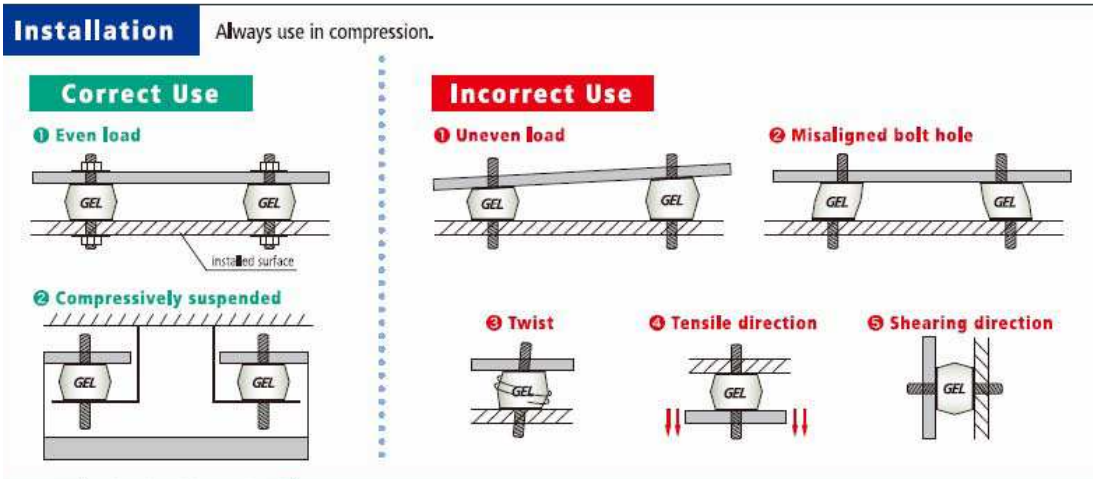

COMPELMA – ZA des GODETS – 33 rue des Petits Ruisseaux – 91370 VERRIERES LE BUISSON – France
Tel : 33 (0)1 69 75 21 21 – Fax : 33 (0)1 60 11 40 19 – www.compelma.com – info@compelma.com